Preliminary Cloud-to-Ground Lightning Climatology for Southern Nevada

James B. Sanders and Darryl Randerson
Air Resources Laboratory - Special Operations and Research Division

ABSTRACT

The Nevada Test Site (NTS) magnetic direction-finding system is described along with the lightning alert and warning system designed to protect personnel on and around the NTS. This cloud-to-ground lightning detections system has been in operation for eleven years. Examples of the lightning alert procedure are described and graphical summaries of flash densities are portrayed. Seven warm seasons (June through September, 1993-1999) of cloud-to-ground lightning flashes are analyzed for southern Nevada. A total of 234,095 flashes were detected within the 107,520 km^2 analysis area for an average flash density of 0.3 fl/km^2/warm season. The seasonal maximum flash densities range from 108 fl/5 km^2 over the northern end of the Spring Mountains in 1999, to 143 fl/5 km^2 over the northern end of the Sheep Range in 1998. For the entire area, the maximum hourly flash rates occur at 4:00 p.m. PDT; however, over the large mountain ranges it occurs at 1:00 p.m. PDT.

INTRODUCTION

This study was undertaken to provide new information on cloud-to-ground (CG) lightning in southern Nevada and to create a preliminary climatology of CG lightning in this mountainous desert environment. Information presented here has documented the spatial and temporal distributions and flash densities of CG lightning in southern Nevada. These and future data will increase our knowledge of desert thunderstorm and lightning activity; thereby contributing useful information that should aid in reducing vulnerabilities to CG lightning, to improving the quality and timeliness of weather forecasts, and to reducing costs due to thunderstorm and CG lightning damage.

THE NETWORK

A cloud-to-ground lightning detection and warning system has been in operation on the NTS since 1987 (Scott, 1988). The system is based on the magnetic direction technology developed by the Lightning Location and Protection, Inc. which has been described by Krider, et al. (1980). The NTS network consists of five Direction Finders (DFs). Figure 1 shows that a DF is located in each of the four corners of the NTS and another DF is sited west of Las Vegas, Nevada (LAS). The approximate rectangular shape of the NTS leads to east-west baselines of 40 km and north-south baselines of nearly 75 km. CG lightning flashes detected by the DFs are multiplexed from the NTS to the Position Analyzer (PA) located at the Department of Energy (DOE) Nevada Support Facility in North Las Vegas. With the requirement for high resolution flash detection capability on the NTS, the DF gains were reduced to be compatible with the baseline length of the NTS detectors.

As Figure 2 demonstrates, the PA promptly processes the raw DF data, automatically computing and displaying the locations of the CG flashes in; the Air Resources Laboratory (ARL), Special Operations and Research Division (SORD) Weather Forecast Center, the DOE NSF building, and our forecast center at Control Point 1 (CP-1) on the NTS. The data are made available to users on the ARL/SORD Web Site (www.sord.nv.doe.gov). In addition, the data are transmitted via a Data General computer and a modem link, to numerous customers at the NTS, and to the local United States Air Force weather offices.

The primary function of this lightning detection network is to help ARL/SORD weather forecasters guard the safety of personnel working on and around the NTS; but it has found application in locating lightning induced brush fires, identifying potential points of electrical power disruption, and contributing to aviation safety on and around the NTS. Data form the network has also contributed to the design of electrical power and communication systems in LAS because there has been little quantitative information available on CG lightning flash densities for the southwestern desert regions of the United States.

THE WARNING SYSTEM

The ARL/SORD lightning detection network operates continually. Every morning, at approximately 7:00 a.m. local time, the Duty Forecaster verifies the status of the network by transmitting a test flash. Moreover, SORD personnel have developed an automatic lightning status (ALS) check system that monitors the communications lines from the DFs to the PA. This system verifies that the DF self-test messages are active. If they are not, the ALS generates an audio alarm message that, when displayed, provides an explanation of the potential communication problem. Corrective actions are taken promptly.

In agreement with project managers on the NTS, SORD weather forecasters are responsible for providing weather updates to senior management. Focus is on the potential for CG lightning; especially, if personnel are handling explosives or are working on towers and around electrical cables. If CG lightning is detected within 20 mi (32 km) of the boundary of the NTS, the SORD Weather Forecaster issues a Lightning Alert for the NTS. This area is defined by the heavy dark line encircling the NTS in Figure 1. An

example of one of these alerts is shown in Figure 3. The Lightning Alert is announced by the SORD forecaster via an “all nets” radio broadcast on and around the NTS (see Figure 2). In addition, the forecaster notifies other key facilities by telephone calls as well as through the SORD Meteorological Alert Distribution System (MADS). Once the alert has been issued, the Duty Forecaster tracks lightning activity, issuing updates as needed to protect personnel and sensitive experimental equipment. Through a local area network connection, CG lightning displays (see Figure 2) are available to project managers so that they can monitor the lightning threat through consultation with the Duty Forecaster. Project managers are then notified by the Duty Forecaster when the threat of CG lightning has ceased.

CLIMATOLOGY AND TOPOGRAPHY

Southern Nevada lies on the northeastern edge of the Mojave Desert. Consequently the climate is arid with limited precipitation. Thunderstorm activity, and the accompanying CG lightning, is primarily a summertime phenomenon in the vicinity of the NTS (Quiring 1977 and 1983) and over southern Nevada (Randerson, 1997). Consequently, in this study the focus was on warm-season lightning where the warm season is defined as June through September. Las Vegas and Desert Rock (on the NTS) average 9-10 thunderstorm days, respectively, from June through September. More thunderstorm activity occurs over the large mountain ranges than over the desert valleys (Randerson, 1976). Thunderstorms and severe thunderstorms generally occur during July and August when moist tropical air can flow northward over the lower Colorado River valley and into Arizona, southern Nevada, and Utah. Many researchers and weather forecasters (Bryson and Lowery, 1955, Hales, 1972, Brenner, 1974, Carleton, 1985, Balling and Brazel, 1987, Douglas, et al., 1993, and others)call this seasonal event the “southwestern monsoon”. On occasion, this phenomenon is associated with significant thunderstorm development and heavy precipitation in Arizona, Nevada, and Utah.

Topography plays a critical role in modulating thunderstorm activity and in augmenting precipitation near mountain ranges. On the meso-scale, mountain ranges can create thermally driven convergence zones that enhance thunderstorm development (Hill, 1993, Maddox et al. 1995, and Runk, 1996). Figure 1 shows that the topography of southern Nevada is complex and consists of north-south oriented mountain ranges separated by small basins and dry lake beds. Elevations range from approximately 500 meters above mean sea level (MSL) in the Colorado River valley to nearly 3,650 meters MSL for Mt. Charleston in the Spring Mountain Range located west of LAS. The Sheep Range, to the north of LAS, contains two peaks with elevations between 2,900 meters and 3,000 meters MSL.

Over the NTS, terrain above 2,000 meters MSL extends from Shoshone Mountain (2,200 meters MSL) northward, forming the Belted Range and Kawich Range that extend northward from the NTS. The Quinn Canyon Range, located in the north cental part of Figure 1 contains several peaks ranging from 3,000 meters to 3,500 meters MSL. In the northeastern quarter for Figure 1, the Delmar Mountains are located between Alamo (ALM) and Caliente (CAL), Nevada.

The southeastern quadrant of Figure 1 contains the Colorado and Virgin River valleys with terrain generally below 1,700 meters MSL. The Virgin Mountains, located just south of Mesquite, Nevada, separate these two river basins. Most of the population of Nevada is located in the Las Vegas metropolitan area where more than one million residents live, not including tourists. In general, the topography in the northern half of Figure 1 lies above 1,500 meters MSL with a few mountain peaks reaching to near 3,500 meters MSL. In the southern half of figure 1 the terrain lies below 1,500 meters except for the Spring Mountains and the Sheep Range. Death Valley is located in California to the southwest of the NTS and a large flat basin, the Amargosa Desert, lies to the south and west of the NTS.

LIGHTNING SUMMARIES

Seven warm seasons (June through September 1993-1999) of CG lightning flashes have been analyzed for southern Nevada. The area of analysis was enclosed within a circle with a radius of 185 km, centered on CP-1 on the NTS. Figure 1 illustrates the 107,520 km^2 area covered by this investigation. No attempt was made to account for undetected flashes. A more comprehensive report on CG lightning within this area for 1993 through 1997 has been prepared by Randerson (1999).

Cloud-to-ground lightning data were summarized and analyzed for these four summer months for the seven-year period 1993 through 1999. The annual warm season CG flash totals are tabulated in Table1. The data listed in Table 1 illustrate the large inter-annual variability in CG lightning (thunderstorm) activity in a desert environment. A total of 234,095 cloud-to-ground lightning flashes were detected for the period of record and for the analysis area. Of these flashes,228,996 lowered negative charge to the ground (negative flashes) and 5099, or 2.2%, lowered positive charge to the ground (positive flashes). Based on the total number of flashes detected during seven warm seasons within the study area, the mean warm season CG flash density for the analysis area is 0.3 flashes/sq km (fl/km^2). This number is much smaller than the annual average of 2.0 fl/km^2, for the contiguous United States, that can be derived from the data presented by Orville (1994), and is slightly smaller than the annual flash densities portrayed over southern Nevada in the figures presented by Orville and Silver (1997) for 1992 through 1995. Analysis of the flash data indicated that little or no CG lightning occurred over approximately 20% of the area west of the NTS. If this area is excluded, the average annual flash density increases to nearly 0.36 fl/km^2.

Table 1. Warm season (June through September) cloud-to-ground lightning flash totals for 1993 through 1999.

Year	Total Flashes	Positive Flashes	Percent Positive
1993	19,183	345	1.8
1994	36,367	596	1.6
1995	27,354	579	2.1
1996	11,686	274	2.3
1997	34,938	1,098	3.1
1998	60,302	1,269	2.2
1999	44,335	938	2.1
TOTAL	234,095	5,099	2.2

SPATIAL PATTERN

For the seven-year warm-season data record, the CG flash data were summarized according to 5 sq km areas. This summary is shown in Figure 4. Contours in this figure are configured to yield annual flash densities in flashes/km^2(fl/km^2). For example, if the seven-year total flash count in a 5 km^2 area is 140 flashes, then the contour passing through the center of this box would have an average seasonal value of 4.0 fl/km^2 (or 140 fl/5 km^2/7 seasons = 4.0 fl/km^2/season). Contour values in Figure 4 range from 2.0 to 6.0 fl/km^2.

Figure 4 shows that the average seasonal flash densities are greatest over high terrain (above 2,000 meters). Flash densities of 3.0 to 9.1 fl/km^2 were measured in the vicinity of the large mountain ranges (Figure 1). The maximum average annual seasonal flash density, 9.1 fl/km^2 (317 fl/5 km^2/7 seasons), occurred over the northern end of the Spring Mountain Range located south of the NTS. Average seasonal flash densities of 3.0 fl/km^2 or more occurred over terrain above 1,500 meters MSL. Flash densities of 3.0 fl/km^2 or more are comparable to those reported by Orville and Silver (1997) east of the Continental Divide, and a flash density of 9.1fl/km^2 is comparable to that detected in Florida (Orville and Silver, 1997); especially if adjusted for detection efficiency.. Small seasonal flash densities were confined to dry lakes and to lower elevations; however, these areas were not spared from individual days with large (3 to 4 fl/km^2) flash densities. These flash densities are much larger than anticipated for a desert region and emphasize the potential lightning hazard in one of the fastest growing areas in the United States. Such large flash densities are quite hazardous to people who live or vacation in the mountains, to aviation interests, to communications systems, to power distribution networks, and to the public.

SOME EXTREMES

The maximum, single season flash density was 28.6 fl/km^2 (143 fl/5 km^2) over the Sheep Range in 1998. The peak, individual, thunderstorm flash density was 23.2 fl/km^2 (116 fl/5 km^2)on July 19, 1998, over the Mormon Mountains located approximately 100 km northeast of Las Vegas, Nevada. This large flash density was associated with a meso-scale convective system (MCS) that moved southwestward across southern Nevada on July 19-20, 1998. This storm appears to have been driven by a Maddox et al. (1980) Type IV pattern or by a classic Randerson (1997) Type B flow pattern. As this MCS moved from near St. George, Utah, to Las Vegas, it generated 7,408 CG lightning flashes during the 14-hr period from 1700 PDT July 19th to 0700 PDT on July 20th. Additional information on extreme events is being presented at this conference (Randerson and Sanders, 2000).

DIURNAL PATTERN

The hourly flash rate for the seven-year warm season period of record is shown in Figure. 5. The late afternoon peak at 1600 to 1700 PDT is clearly evident as is the minimum near sunrise. The figure also shows that CG lightning activity increases rapidly after 1800 UTC (1100 PDT) and decreases at a rather steady rate after 1600 PDT. Although positive flashes occur during all hours, most of them are found between 1300 PDT and 2300 PDT, with the peak activity between 1700 and 1800 PDT. Few positive flashes occur between 0000 PDT and 1100 PDT. Based on an analysis of individual storm CG activity, positive flashes appear to be related to storm dissipation. Over the mountains, the peak flash rate occurs between 1300 and 1400 PDT and can remain elevated until 0200 PDT.

CONCLUSIONS

The most active CG lightning season in southern Nevada was 1998 when 60,302 CG flashes were detected. It is noteworthy to mention that this large flash rate followed one of the strongest El Nino events of the 20th century.

The following conclusions are drawn from this study:

1. There is a large inter-annual variation in warm season CG lightning over southern Nevada. For the seven years summarized in this study the total measured flash counts ranged from 11,693 flashes in 1996 to 60302 flashes in 1998.

2. The annual average percentage of flashes depositing positive charge to the ground is 2.2%, slightly less than that reported by Orville (1994) for the contiguous United States for 1989-1991. However, in 1997, 3.1% of the warm season flashes were positive.

3. Maximum flash densities occurred over high terrain (above 1,500 meters); but not necessarily over the highest terrain. Minimum flash densities tend to occur over desert valleys and over terrain below 1,500 meters above mean sea level.

4. The maximum average annual warm season flash density measured was 9.1 fl/km^2 over the Spring Mountain Range.

5. The maximum single season flash density was 28.6 fl/km^2 over the Sheep Range in 1998.

6. The peak, individual storm, flash density measured in this study was 116 fl/5 km^2 (23.2 fl/km^2) in the vicinity of the Mormon Mountains located northeast of Las Vegas. This large flash density was associated with a MCS that moved southwestward across southern Nevada on July 19-20, 1998.

7. For the analysis area the daily maximum hourly flash rate occurred between 1600 and 1700 PDT. Minimum CG flash activity occurred between 0700 and 0800 PDT. Hourly flash rates increase rapidly after 1100 PDT and decrease rapidly after 1600 PDT.

8. Over mountainous terrain located to the north and to the west of Las Vegas, the diurnal distribution of CG lightning is different from that for the entire analysis area. Peak flash rates occur between 1300 and 1400 PDT, three hours earlier than that for the entire area. In addition, CG lightning activity remains energetic until 0200 PDT.

9. Warm season positive flashes occur during all hours; however, more occur between 1300 and 2200 PDT than during the other hours. Peak positive flash activity is between 1700 and 1759 PDT. Few positive flashes occur between 0300 and 1100 PDT.

10. There appears to be a significant decrease in warm season flash density to the west of the NTS.

11. A seven-year data base does not include enough realizations to form a robust or representative climatological data base for CG lightning over southern Nevada; however, some clear climatological patterns were resolved through this study.

ACKNOWLEDGMENTS

Work on this project was funded by the U.S. Department of Energy, Nevada Operations Office, through an Interagency Agreement (DE-AI08-97NV13209) with NOAA/ARL.

REFERENCES

Balling, R. C., Jr., and S. W. Brazel, 1987: Diurnal Variations in Arizona Monsoon Precipitation Frequencies. Mon. Wea. Rev., 115, 342-346.

Brenner, I. S., 1974: A Surge of Maritime Tropical Air-Gulf of California to the southwestern United States. Mon. Wea. Rev., 102, 375-390.

Bryson, R. A., and W. P. Lowery, 1955: Synoptic Climatology of the Arizona Precipitation Singularity. Bull. Amer. Meteor. Soc., 36, 329-339.

Carleton, A. M., 1985: Synoptic and Satellite Aspects of the Southwestern U.S. Summer "Monsoon". J. Climate, 5, 389-402.

Douglas, M. W., R. A. Maddox, and K. W. Howard, 1993: The Mexican Monsoon. J. Climate, 6, 1665-1677.

Fuquay, D. M., 1982: Positive Cloud-to-Ground Lightning in Summer Thunderstorms. J. Geophys. Res., 87, 7131-7140.

Hales, J. E., 1972: Surges of Maritime Tropical Air Northward Over the Gulf of California, Mon. Wea. Rev., 100, 298-306.

Hill, C. D., 1993: Forecast Problems in the Western Region of the National Weather Service: An Overview. Weather and Forecasting, 8, 158-165.

Krider, E. P., A. E. Pifer, and D. L. Vance, 1980: Lightning Direction-Finding Systems for Forest Fire Detection. Bull. Amer. Meteor. Soc., 61, 980-986.

Maddox, R. A., D. M. McCollum, and K. W. Howard, 1995: Large-Scale Patterns Associated with Severe Summertime Thunderstorms over Central Arizona. Weather and Forecasting, 10, 763-778.

_____, A., F. Canova, and R. L. Hoxit, 1980: Meteorological Characterization of Flash Flood Events Over the Western United States, Mon. Wea. Rev., 108, 1866-1877.

Orville, R. E. and A. C. Silver, 1997: Lightning Ground Flash Density in the Contiguous United States: 1992-1995. Mon. Wea. Rev., 125, 631-638.

Orville, R.E., 1994: Cloud-to-Ground Lightning Flash Characteristics in the Contiguous United States: 1989-1991. J. Geophy. Res., 99, 10,833-10,841.

Quiring, R.F. 1983: Precipitation Climatology for the Nevada Test Site, WSNSO-351-88, NOAA/ARL/SORD, Las Vegas, NV, 34 pp.

_____, 1977: Climatological Prediction of Cumulonimbus Clouds in the Vicinity of the Yucca Flat Weather Station. NOAA Technical Memorandum NWS WR-121, National Weather Service, Western Region, Salt Lake City, UT, 19 pp.

Randerson, D. and Sanders, J., 2000: Anomalous Cloud-to-Ground Flash Densities Over Southern Nevada,

International Lightning Detection Conference, Global Atmospherics, Inc., Tucson, AZ, Nov. 2000. (In press)

Randerson, D. and Sanders J., 1999: Cloud-to-Ground Lightning Flash Detection and Warning System for the Nevada Test Site. International Conference on Lightning and Static Electricity, Toulouse, France, 6pp.

Randerson, D., 1999: Five-Year, Warm Season, Cloud-to-Ground Lightning Assessment for Southern Nevada, NOAA Technical Memorandum ERL ARL 99-228, NOAA/ARL/SORD, Las Vegas, NV, 94 pp.

_____, 1997: Analysis of Extreme Precipitation Events in Southern Nevada. NOAA Technical Memorandum ERL ARL-221, NOAA/ARL/SORD, Las Vegas, NV, 94 pp.

_____, 1976: Summertime Radar Echo Distributions of Moist Convection over Southern Nevada and Adjacent Areas for 1971 and 1972. NOAA Technical Memorandum ERL ARL-58, Air Resources Laboratory, Las Vegas, Nevada, 37 pp.

Scott, C., 1988: Preliminary Analysis of Cloud-to-Ground Lightning in the Vicinity of the Nevada Test Site. NOAA Technical Memorandum NWS WR-204, National Weather Service Western Region, Salt Lake City, UT, 12 pp.

Runk, K. J., 1996: The Las Vegas Convergence Zone: Its Development, Structure and Implications for Forecasting, Western Region Technical Attachment, No. 96-18, National Weather Service, Western Region, Salt Lake City, UT, 5 pp + figs.

DEFINITIONS, ACRONYMS, ABBREVIATIONS

ALM	Alamo
BLD	Boulder City
BTY	Beatty
CAL	Caliente
CP-1	Control Point 1
DRA	Desert Rock
HEN	Henderson
IND	Indian Springs
LAS	Las Vegas
LTH	Lathrop Wells
MER	Mercury
MES	Mesquite
MOA	Moapa
NTS	Nevada Test Site
SJT	Scotty’s Junction

Figures

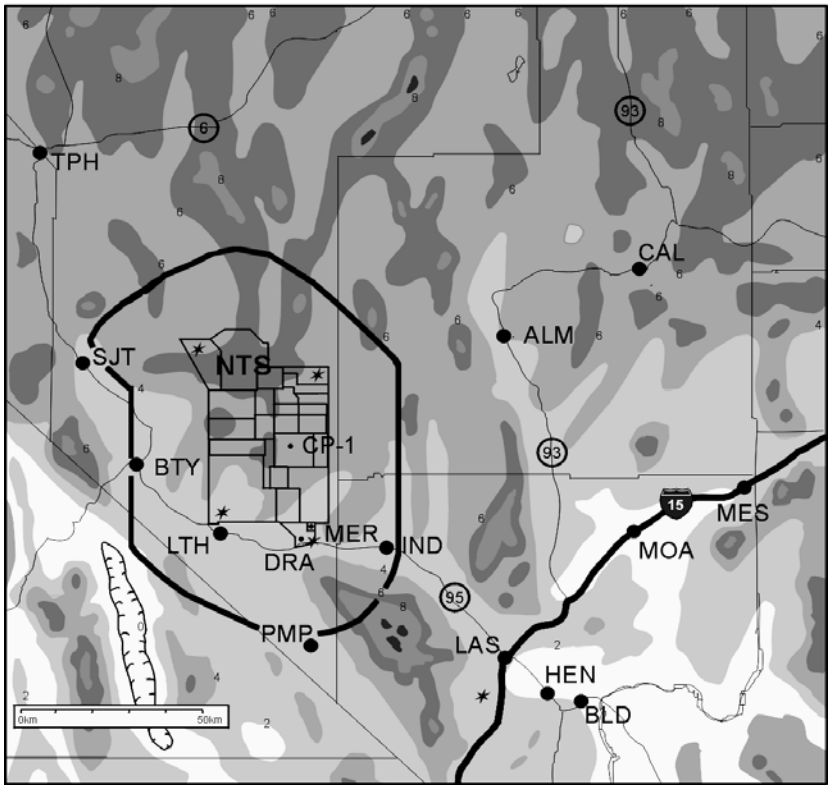

Figure 1. Topography and station locations in southern Nevada. See Definitions, Acronyms, and Abbreviations section for station identification. Dark line encircling the Nevada Test Site (NTS) is the NTS Lightning Alert area. 's indicate the Direction Finder (DF) locations.

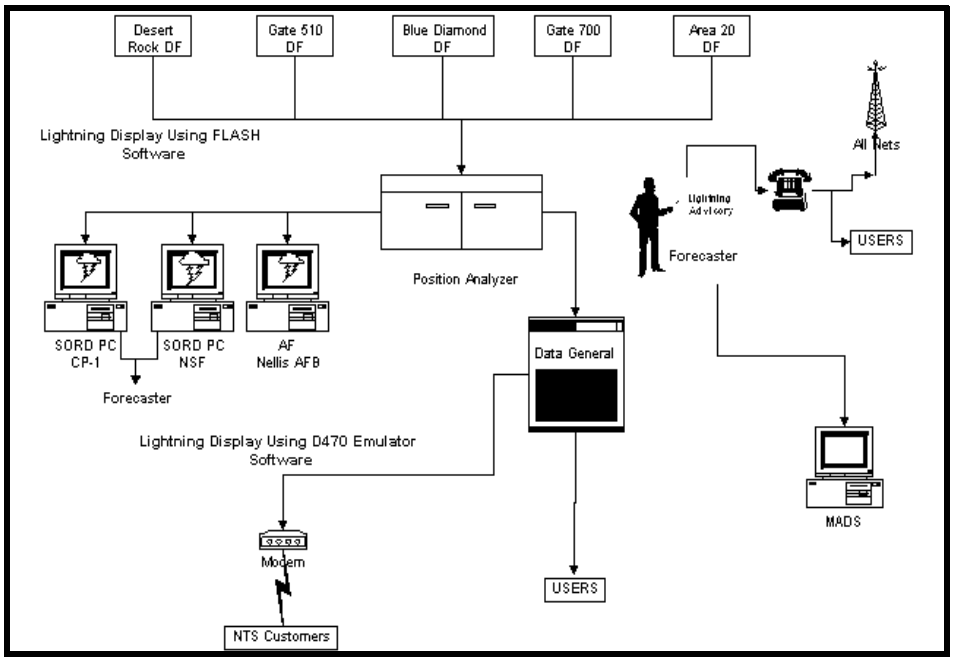

Figure 2. ARL/SORD Lightning Data Distribution System.

ZCZC DOELTGNTS
TTAA00 KDOE 242026
NVZ008-009-250300-

LIGHTNING ALERT

AIR RESOURCES LABORATORY/SPECIAL OPERATIONS & RESEARCH DIVISION

120 PM PDT WED MAY 24 2000

THE AIR RESOURCES LABORATORY IN LAS VEGAS HAS ISSUED A LIGHTNING ALERT

EFFECTIVE UNTIL 800 PM FOR PEOPLE AT THE NEVADA TEST SITE.

THE NTS AUTOMATIC LIGHTNING DETECTION SYSTEM HAS DETECTED SEVERAL

Figure 3. Example of a Lightning Alert for the NTS Area.

Figure 4. Average annual maximum cloud-to-ground lightning flash densities for southern Nevada for 1993 through 1999 for June through September. Shades of grey are flashes/km2/warm season and range from 3 to 9 flashes.

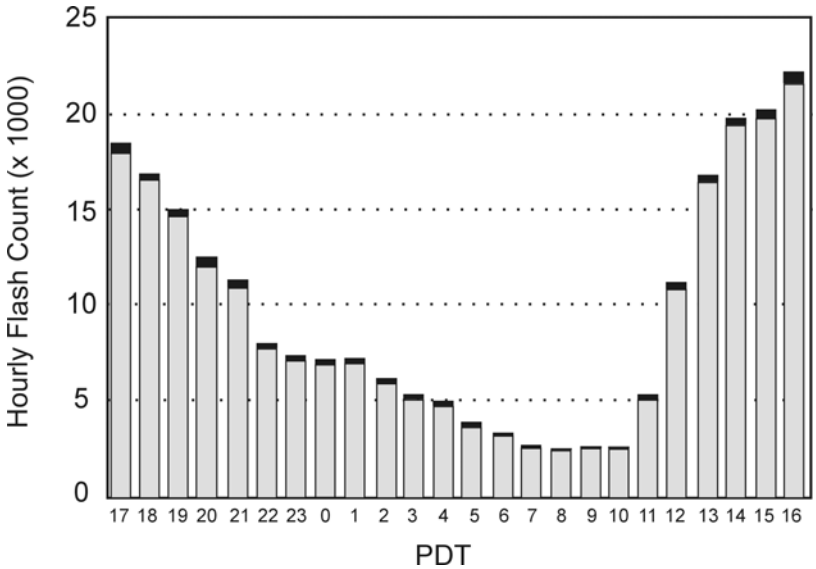

Figure 5. Diurnal distribution of hourly flash rates for southern Nevada for 1993 through 1998 for June through September. Black bars represent positive flashes.